URBAN

SHOWER TRAYS

The Home of Bathroom Living

2010

ULTRA SLIM, stylishly understated and with some of the lowest profiles available, Homestyle's Urban Trays are perfect for specification within minimalist, contemporary showering schemes and wet rooms.

Available in rectangular, square or quad forms, each Urban Tray is manufactured to the highest technical specifications. Thanks to their seamless good looks and hefty weight, the trays could easily be mistaken as being made from ceramic. They are, however, actually crafted from top quality, cast acrylic, which is further strengthened with GRP - glass reinforced plastic. Make no mistake. These trays are built to last and each Urban Tray is guaranteed for an impressive 10 years.

Easy clean, top access wastes and a subtly sloping surface ensure water drains quickly and efficiently - a must for powerful showers. And a non-slip, dappled effect surface means Urban Trays are safe, too. Finished in white, Urban Trays are hard-wearing and are available in over 20 sizes ranging from 800mm x 800mm to 1700mm x 900mm.

WITHOUT A SHADOW…

New to the Urban Collection for 2010 is the stunning 'Shadow' - a statement tray that combines performance with the very latest looks and materials. With an 80mm profile and available in five sizes, this is a tray to rival any bath tub.

Live the **URBAN** life . . .

Shadow tray with stainless steel insert

RECTANGULAR

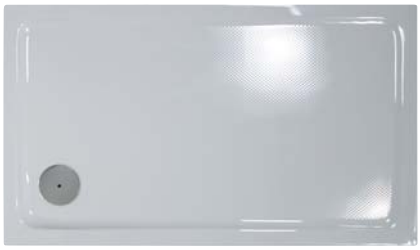

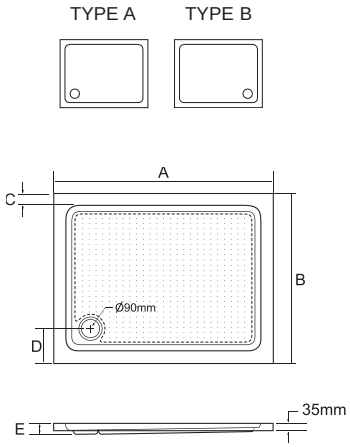

CODE	TYPE	A	B	C	D	E	***£ RRP***
R35B-975	B	900	750	60	170	80 mm	***220.00***
R35A-1070	A	1000	700	50	170	50 mm	***230.00***
R35A-1080	A	1000	800	50	170	45 mm	***245.00***
R35A-1270	A	1200	700	50	170	45 mm	***275.00***
R35A-1280	A	1200	800	50	170	50 mm	***310.00***
R35A-1290	A	1200	900	50	180	80 mm	***355.00***
R35A-1470	A	1400	700	50	170	50 mm	***370.00***
R35A-1475	A	1400	750	50	170	55 mm	***395.00***
R35A-1570	A	1500	700	50	170	50 mm	***410.00***
R35A-1575	A	1500	750	50	170	55 mm	***425.00***
R35A-1580	A	1500	800	50	170	55 mm	***435.00***
R35A-1670	A	1600	700	50	170	55 mm	***420.00***
R35A-1675	A	1600	750	50	170	60 mm	***435.00***
R35A-1680	A	1600	800	50	170	60 mm	***450.00***
R35A-1770	A	1700	700	50	170	50 mm	***450.00***
R35A-1775	A	1700	750	50	170	50 mm	***465.00***
R35A-1790	A	1700	900	50	170	60 mm	***495.00***

90mm Shower Waste required. Please see page 10.

Prices inclusive of VAT

Homestyle's super slim trays are perfect for when space is at a premium.

SQUARE

Simple, clean lines and the lowest of profiles plus 800mm, 900mm and 1000mm dimensions make Urban's square and quad trays some of the most stylish and versatile available.

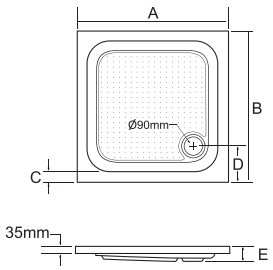

CODE	A	B	C	D	E	***£ RRP***
S35-8	800	800	55	190	85 mm	***215.00***
S35-9	900	900	55	180	85 mm	***230.00***
S35-10	1000	1000	65	180	75 mm	***295.00***

90mm Shower Waste required. Please see page 10.

Prices inclusive of VAT

QUAD

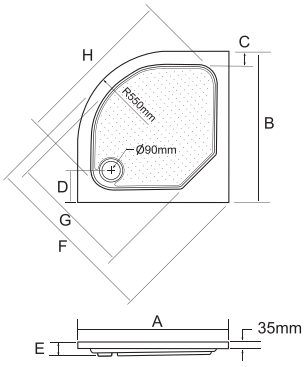

CODE	A	B	C	D	E	F	G	H	***£ RRP***
Q35-88	800	800	60	180	75	910	610	870 mm	***215.00***
Q35-99	900	900	70	190	75	1050	730	960 mm	***240.00***
Q35-1010	1000	1000	75	190	80	1180	860	1100 mm	***295.00***

90mm Shower Waste required. Please see page 10.

URBAN SHADOW

SHADOW

CODE	A	B	C	D	E	*£ RRP*
SR35A-1270	1200	700	55	350	80 mm	***395.00***
SR35A-1280	1200	800	55	400	80 mm	***415.00***
SR35A-1470	1400	700	55	350	80 mm	***460.00***
SR35A-1670	1600	700	55	350	80 mm	***495.00***
SR35A-1680	1600	800	55	400	80 mm	***520.00***

90mm Shower Waste required. Please see page 10.

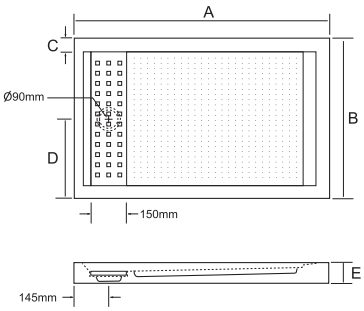

Shower tray statements don't come much bolder than Urban's distinctive 'Shadow'. Available in 5 sizes, with the roomiest - 1600mm easily replacing a bath - the tray's signature removable stainless steel draining insert which conceals the waste is both stylish and highly practical.

Prices inclusive of VAT

Non Slip Surface

Urban Trays are representative of a significantly improved and sophisticated generation of acrylic sanitaryware. 3.2mm thick cast acrylic sheets, reinforced with GRP and featuring fully encapsulated wooden baseboard are used to make the trays and all of Homestyle's Urban Trays conform to both EN263 and BS7015 standards - a must for many specifications.

Top Access 90mm Shower Waste

SW90C Chrome ***£29.00***

Urban Trays feature generously proportioned, easy clean 90mm wide top access wastes that conform to EN329 and are capable of draining up to 26 litres of water per minute - 2 litres more than the European average. Ventilation is provided through a single hole in the centre of the waste.

From contemporary wet rooms to family walk-ins, Urban Trays are for everyone. Measuring from just 35mm high*, they can be positioned virtually flush to the floor, creating a seamless style that is accessible to all. And thanks to their slightly dappled, non-slip surface, Urban Trays are also safe, ensuring peace of mind.

*All measurements are subject to a manufacturing tolerance

10 YEAR
GUARANTEE

All Urban shower trays are guaranteed for 10 years from date of purchase. Further details upon request.

HOMESTYLE
bathrooms

Homestyle Bathrooms
Unit 21
Hainault Works
Hainault Road
Little Heath
Romford
Essex RM6 5ST

Tel: 020 8599 8080
Fax: 020 8599 7070
E-mail: info@homestyle-bathrooms.co.uk
Website: www.homestyle-bathrooms.co.uk

Uniclass L824		
CI/SfB	(74)	X

For details of our other products the following brochures are available on request:

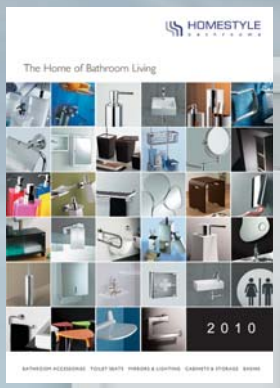

HOMESTYLE
bathroom accessories, mirrors, cabinets & basins

ártica
bathroom furniture & basins